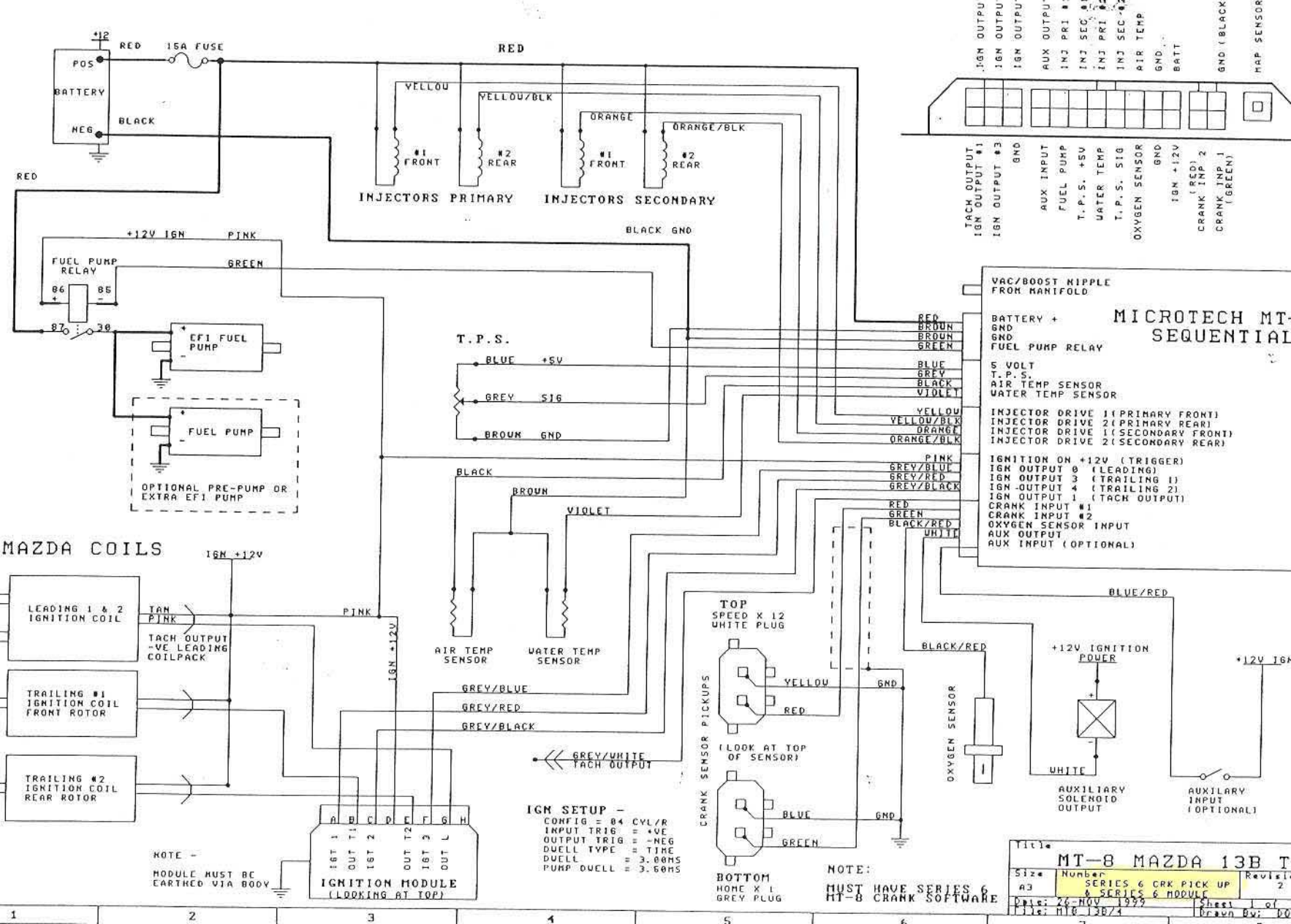
+12
POS
BATTERY
NEG
RED
15A FUSE
BLACK
RED
YELLOW
YELLOW/BLK
ORANGE
ORANGE/BLK
#1 FRONT
#2 REAR
#1 FRONT
#2 REAR
INJECTORS PRIMARY
INJECTORS SECONDARY
BLACK GND
+12V IGN
PINK
FUEL PUMP RELAY
GREEN
86
85
87
30
EFI FUEL PUMP
FUEL PUMP
OPTIONAL PRE-PUMP OR EXTRA EFI PUMP
T.P.S.
BLUE +5V
GREY SIG
BROWN GND
BLACK
BROWN
VIOLET
AIR TEMP SENSOR
WATER TEMP SENSOR
MAZDA COILS
IGN +12V
LEADING 1 & 2 IGNITION COIL
TAN
PINK
TACH OUTPUT -VE LEADING COILPACK
PINK
IGN +12V
TRAILING #1 IGNITION COIL FRONT ROTOR
TRAILING #2 IGNITION COIL REAR ROTOR
GREY/BLUE
GREY/RED
GREY/BLACK
GREY/WHITE TACH OUTPUT
A B C D E F G H
IGT 1
OUT T1
IGT 2
OUT T2
IGT 3
OUT L
IGNITION MODULE
(LOOKING AT TOP)
NOTE -
MODULE MUST BE EARTHED VIA BODY
IGN SETUP -
CONFIG = 04 CYL/R
INPUT TRIG = +VE
OUTPUT TRIG = -NEG
DWELL TYPE = TIME
DWELL = 3.00MS
PUMP DWELL = 3.60MS
TOP
SPEED X 12
WHITE PLUG
CRANK SENSOR PICKUPS
YELLOW
GND
RED
(LOOK AT TOP OF SENSOR)
BLUE
GND
GREEN
BOTTOM
HOME X 1
GREY PLUG
NOTE:
MUST HAVE SERIES 6
MT-8 CRANK SOFTWARE
BLUE/RED
BLACK/RED
OXYGEN SENSOR
+12V IGNITION POWER
WHITE
AUXILIARY SOLENOID OUTPUT
AUXILARY INPUT (OPTIONAL)
+12V IGN
IGN OUTPUT 0
IGN OUTPUT 3
IGN OUTPUT 4
AUX OUTPUT 1
INJ PRI #1
INJ SEC #2
INJ PRI #2
INJ SEC #1
AIR TEMP
GND
BATT
GND (BLACK)
MAP SENSOR
TACH OUTPUT
IGN OUTPUT #1
IGN OUTPUT #3
GND
AUX INPUT
FUEL PUMP
T.P.S. +5V
WATER TEMP
T.P.S. SIG
OXYGEN SENSOR
GND
IGN +12V
CRANK INP 2 (RED)
CRANK INP 1 (GREEN)
VAC/BOOST NIPPLE FROM MANIFOLD
BATTERY +
GND
GND
FUEL PUMP RELAY
5 VOLT
T.P.S.
AIR TEMP SENSOR
WATER TEMP SENSOR
INJECTOR DRIVE 1(PRIMARY FRONT)
INJECTOR DRIVE 2(PRIMARY REAR)
INJECTOR DRIVE 1(SECONDARY FRONT)
INJECTOR DRIVE 2(SECONDARY REAR)
IGNITION ON +12V (TRIGGER)
IGN OUTPUT 0 (LEADING)
IGN OUTPUT 3 (TRAILING 1)
IGN OUTPUT 4 (TRAILING 2)
IGN OUTPUT 1 (TACH OUTPUT)
CRANK INPUT #1
CRANK INPUT #2
OXYGEN SENSOR INPUT
AUX OUTPUT
AUX INPUT (OPTIONAL)
MICROTECH MT-
SEQUENTIAL
Title
MT-8 MAZDA 13B T
Size A3
Number
SERIES 6 CRK PICK UP & SERIES 6 MODULE
Revisi 2
Date: 26-NOV-1999
Sheet 1 of
File: MT8_13B/4
Drawn By: DO